0199

0198

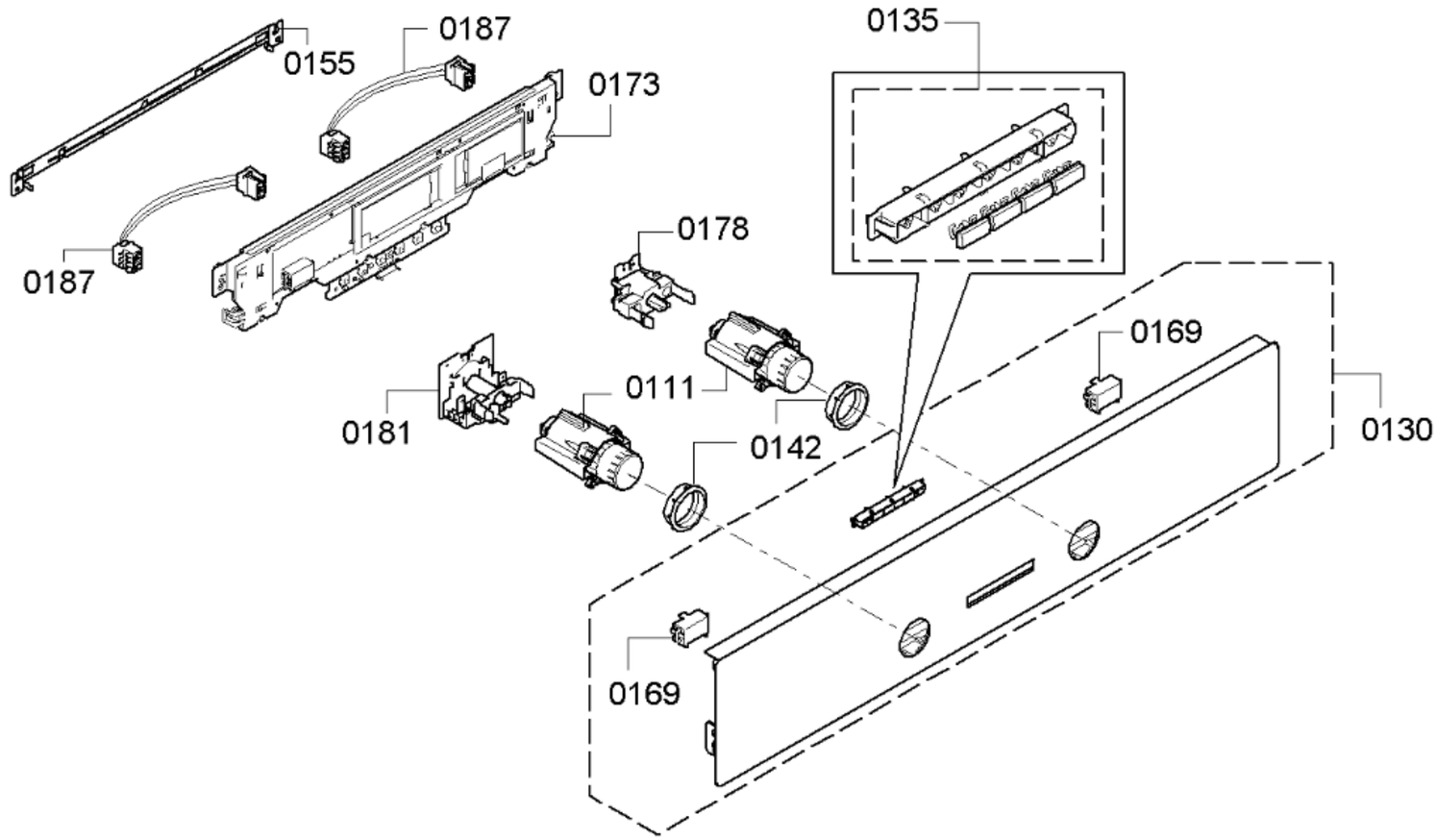

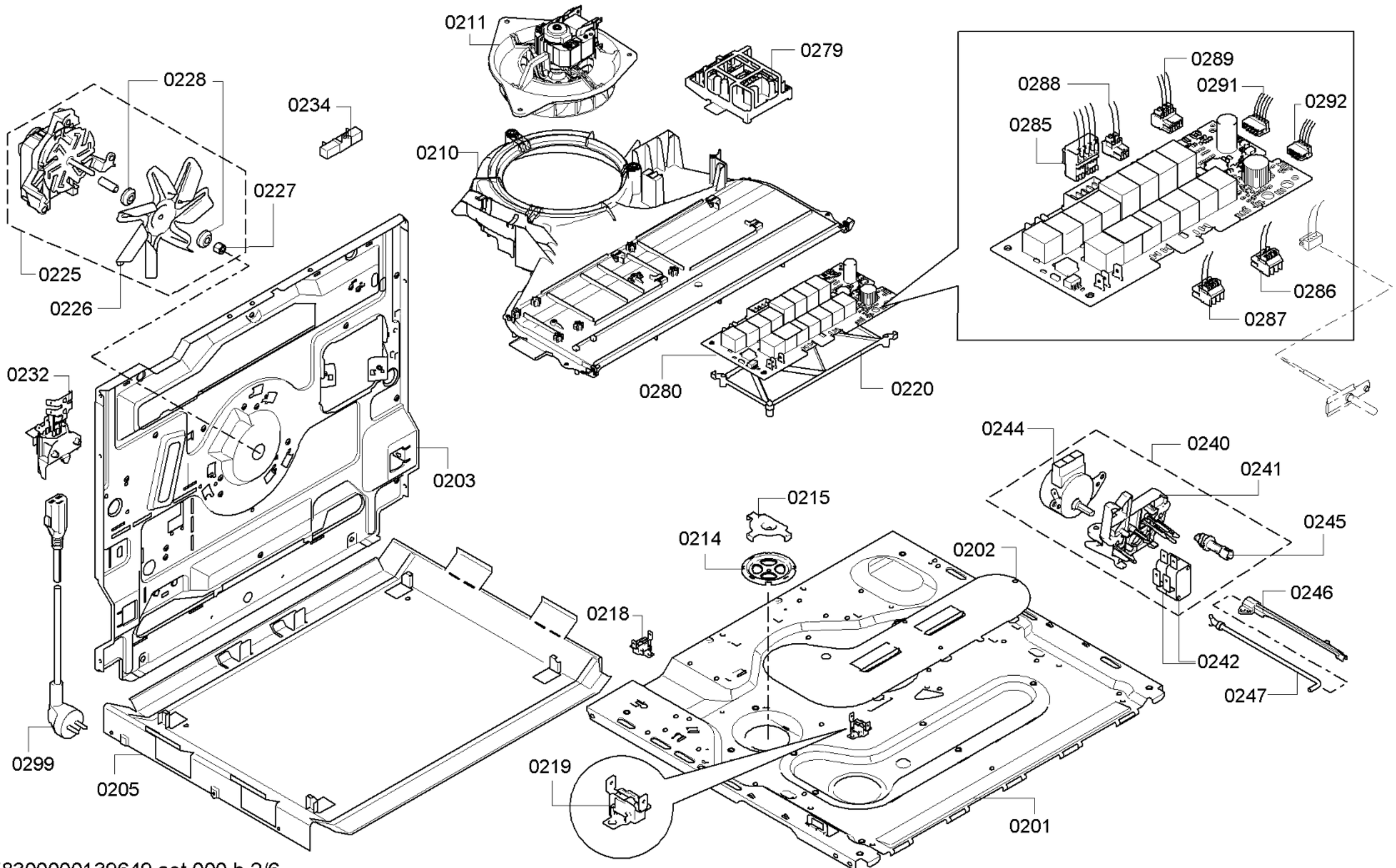

58300000139649 aet 000 b 2/6

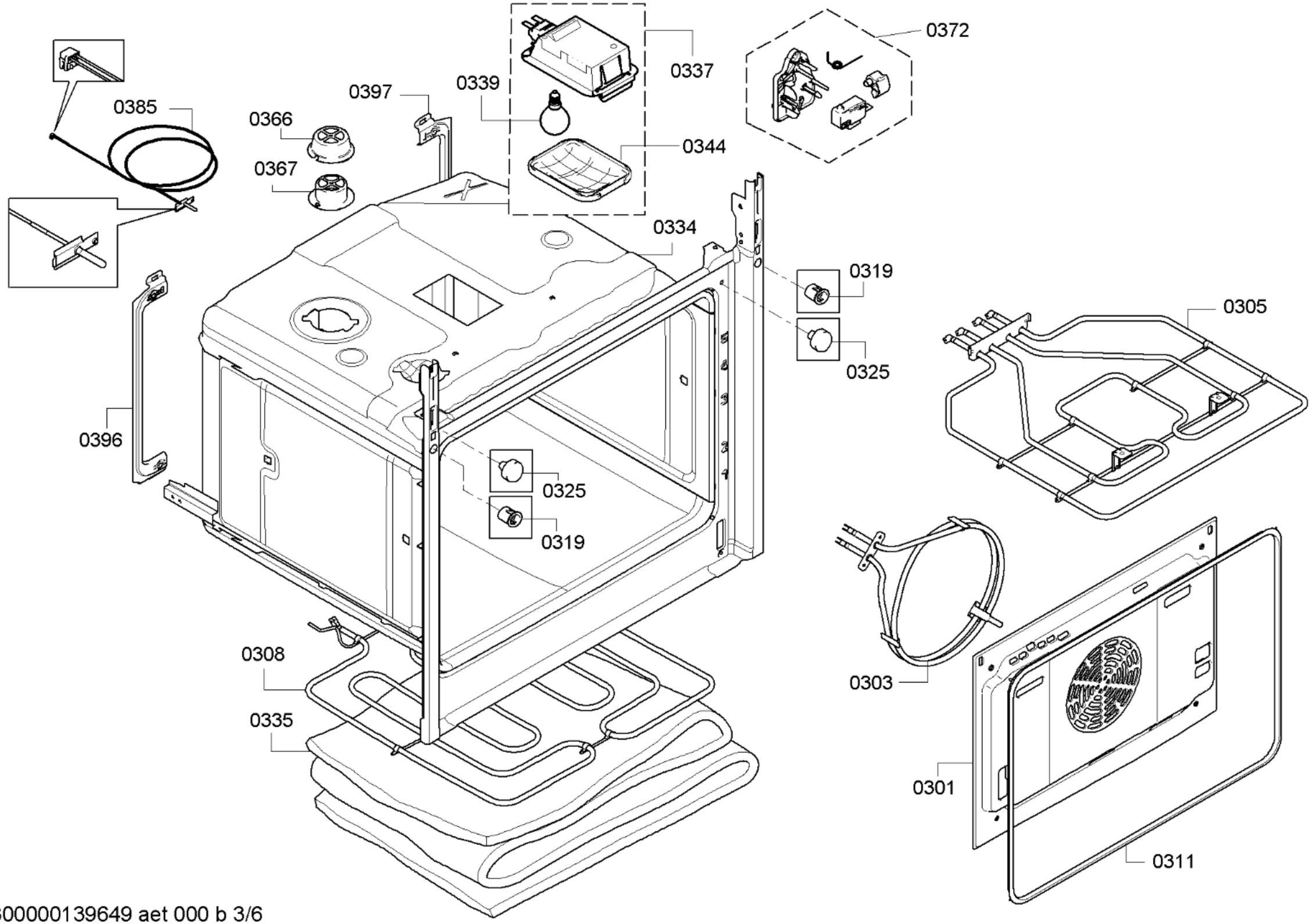

58300000139649 aet 000 b 3/6

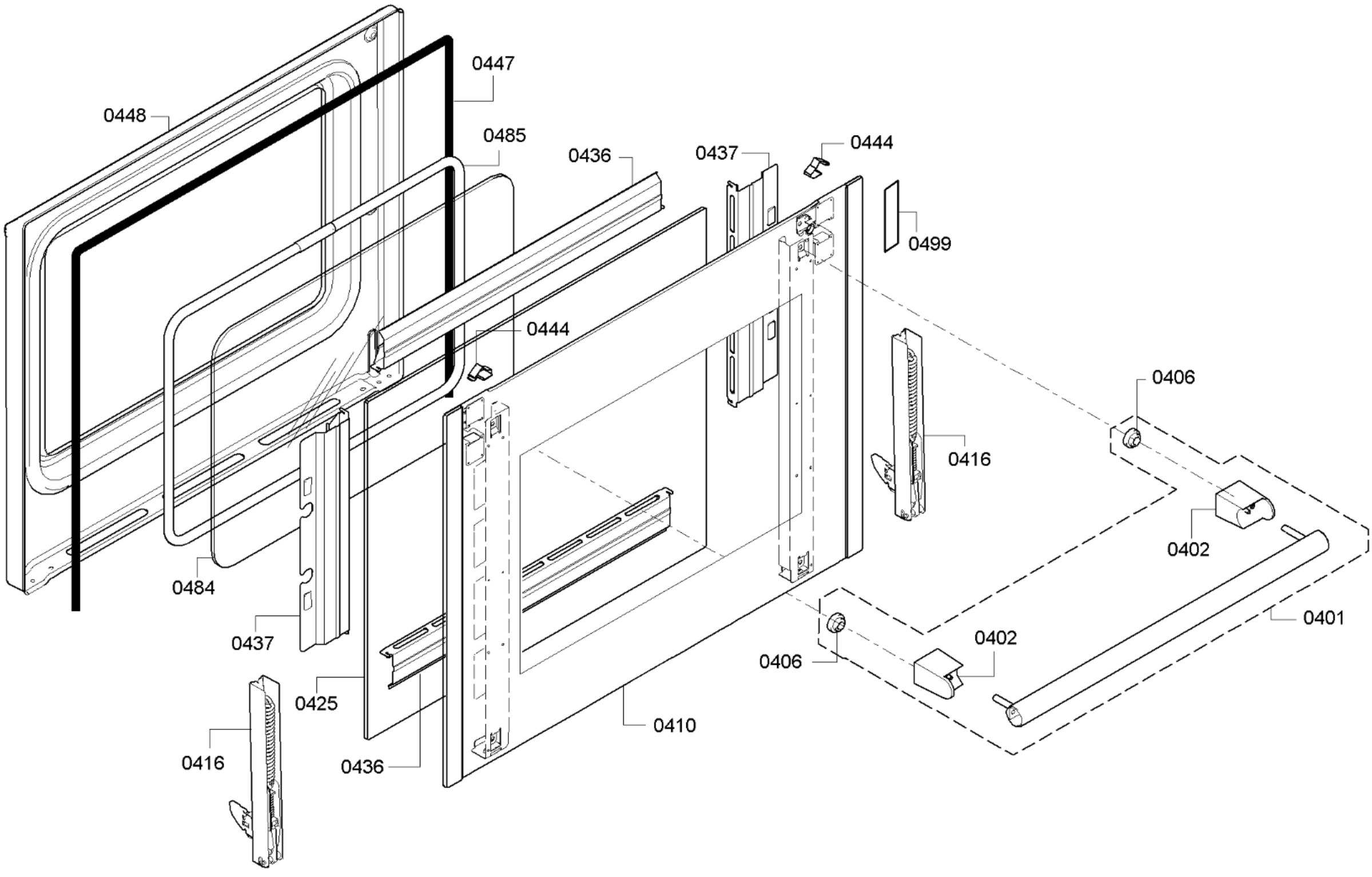

58300000139649 aet 000 b 4/6

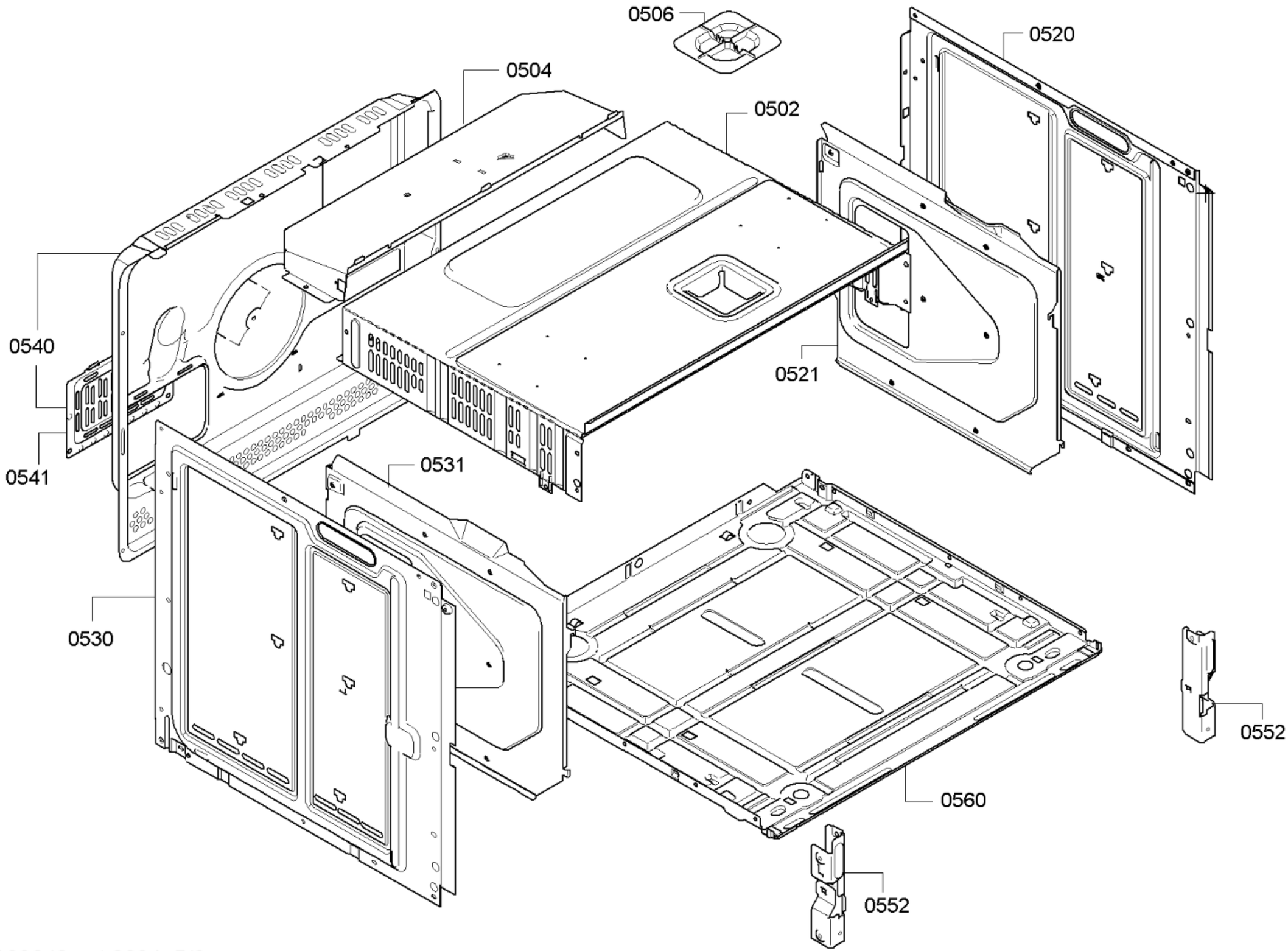

58300000139649 aet 000 b 5/6

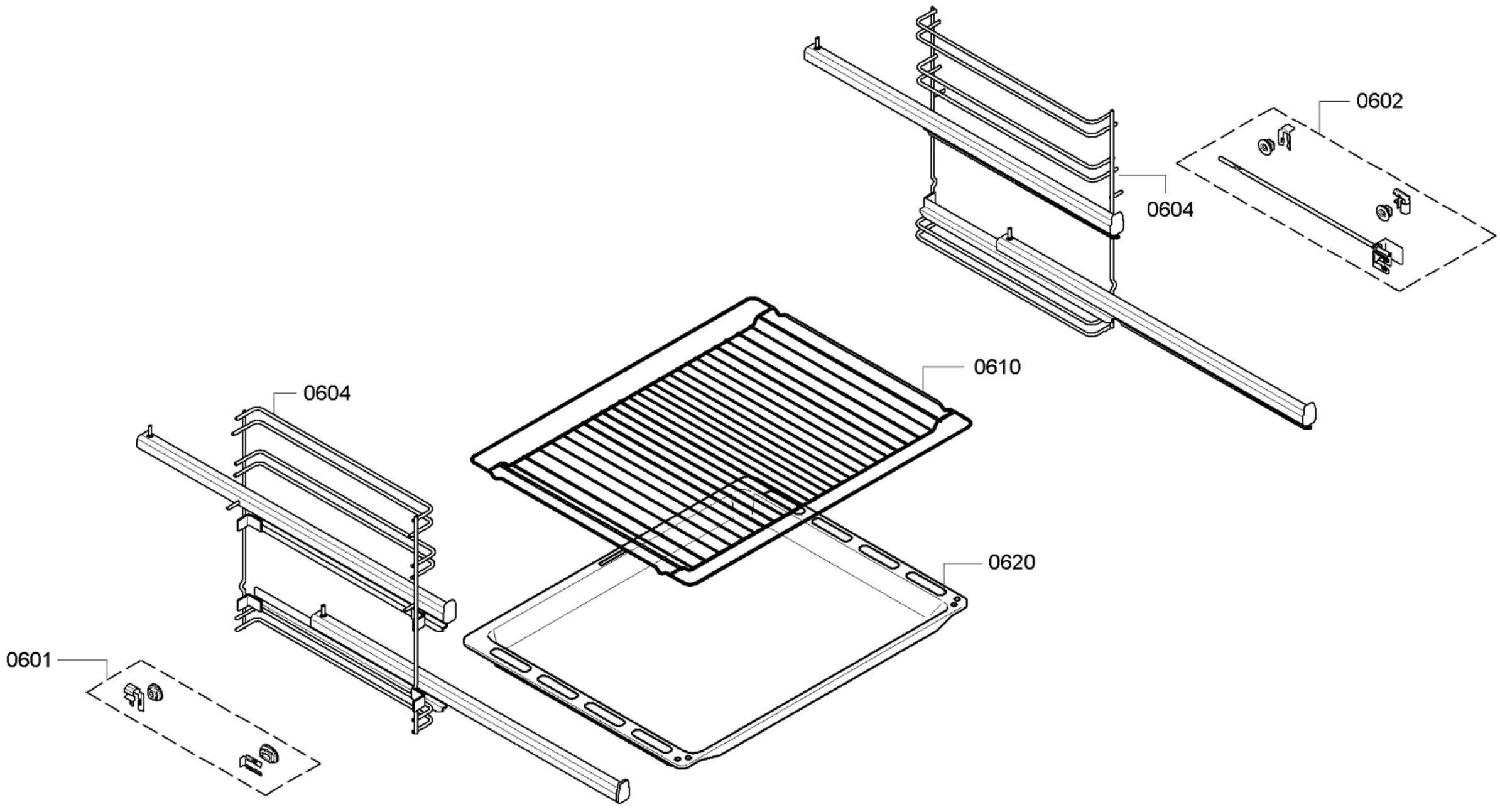

58300000139649 aet 000 b 6/6