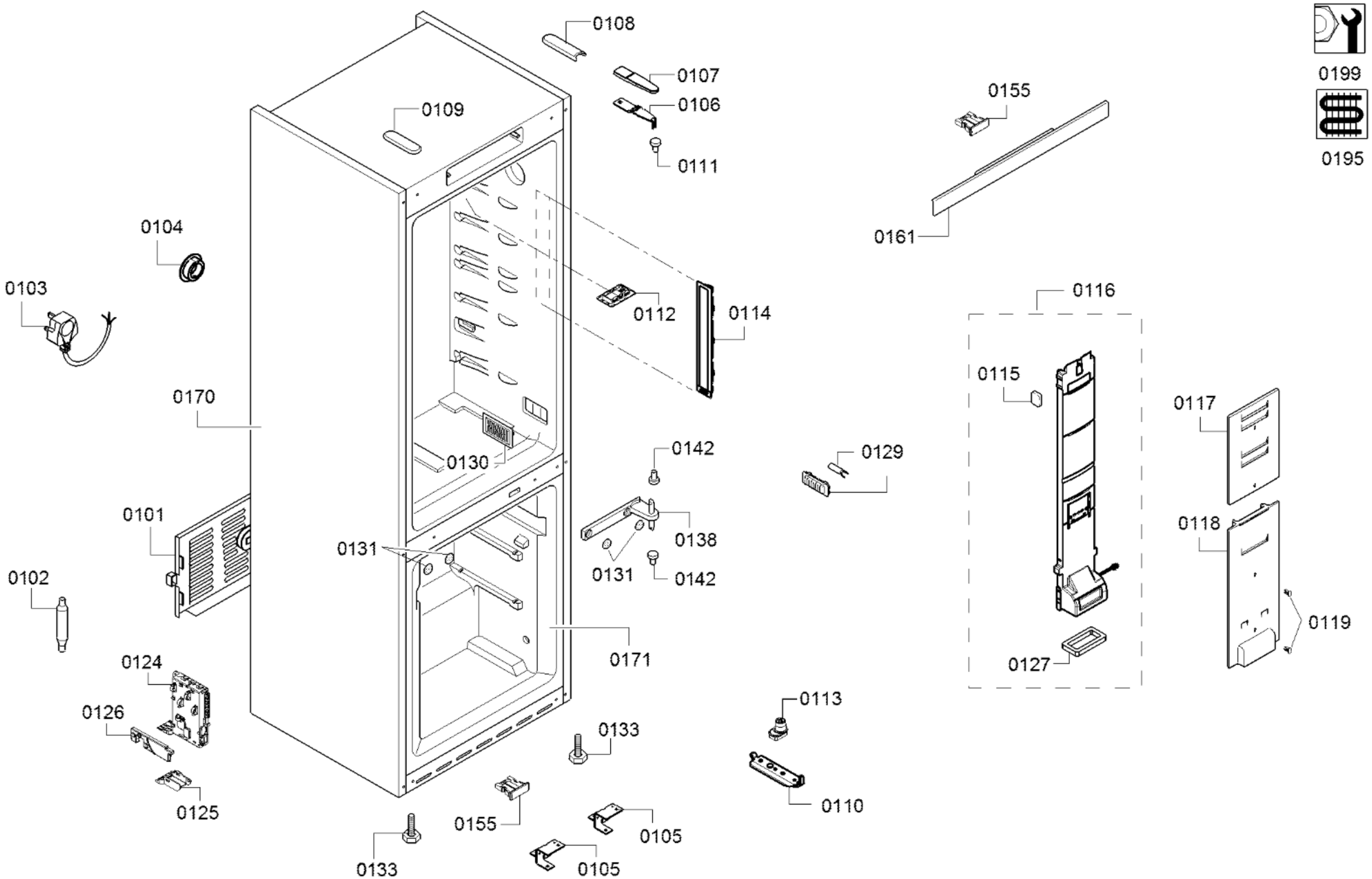

58300000189413 aet 000 d 1/4

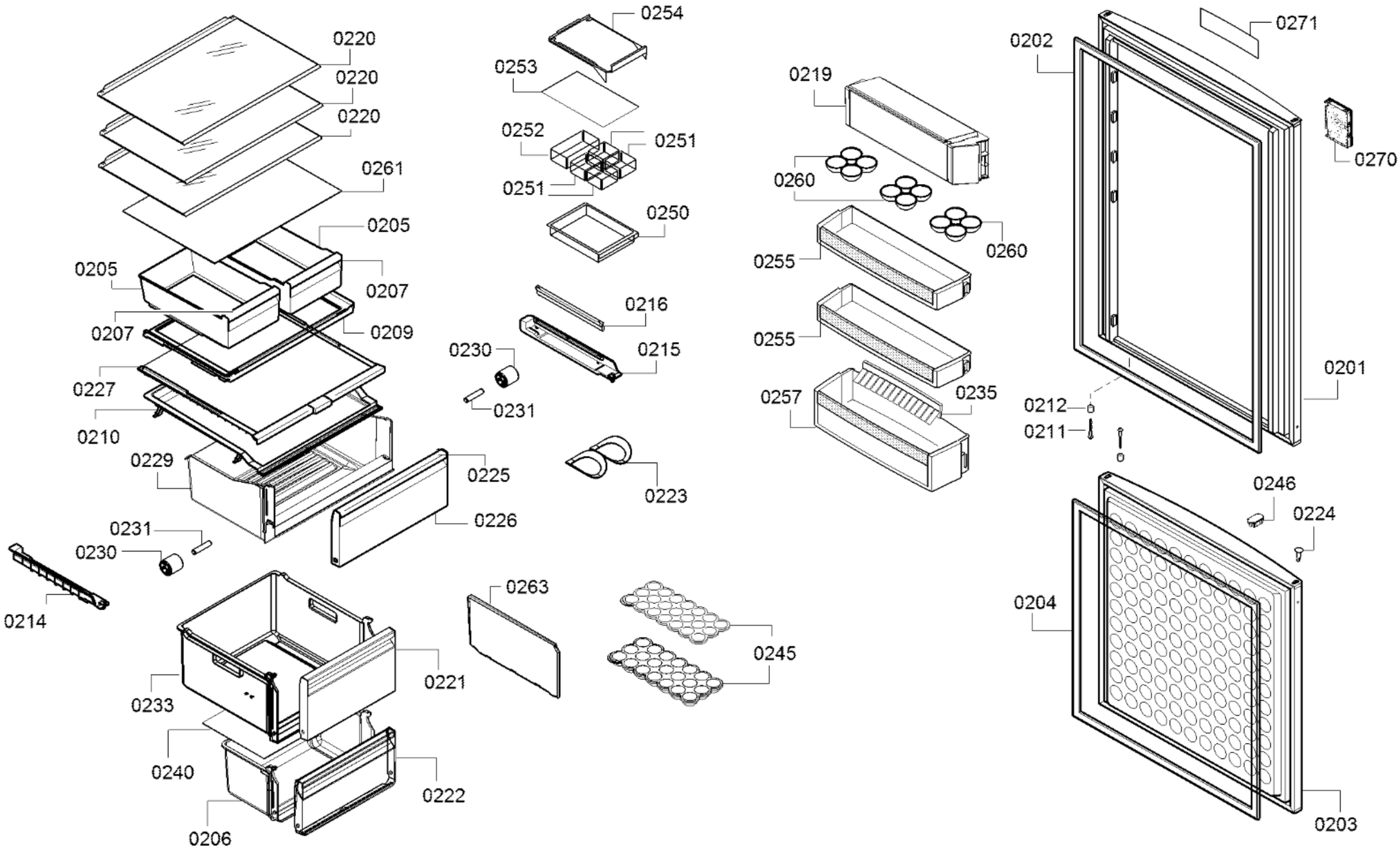

58300000189413 aet 000 d 2/4

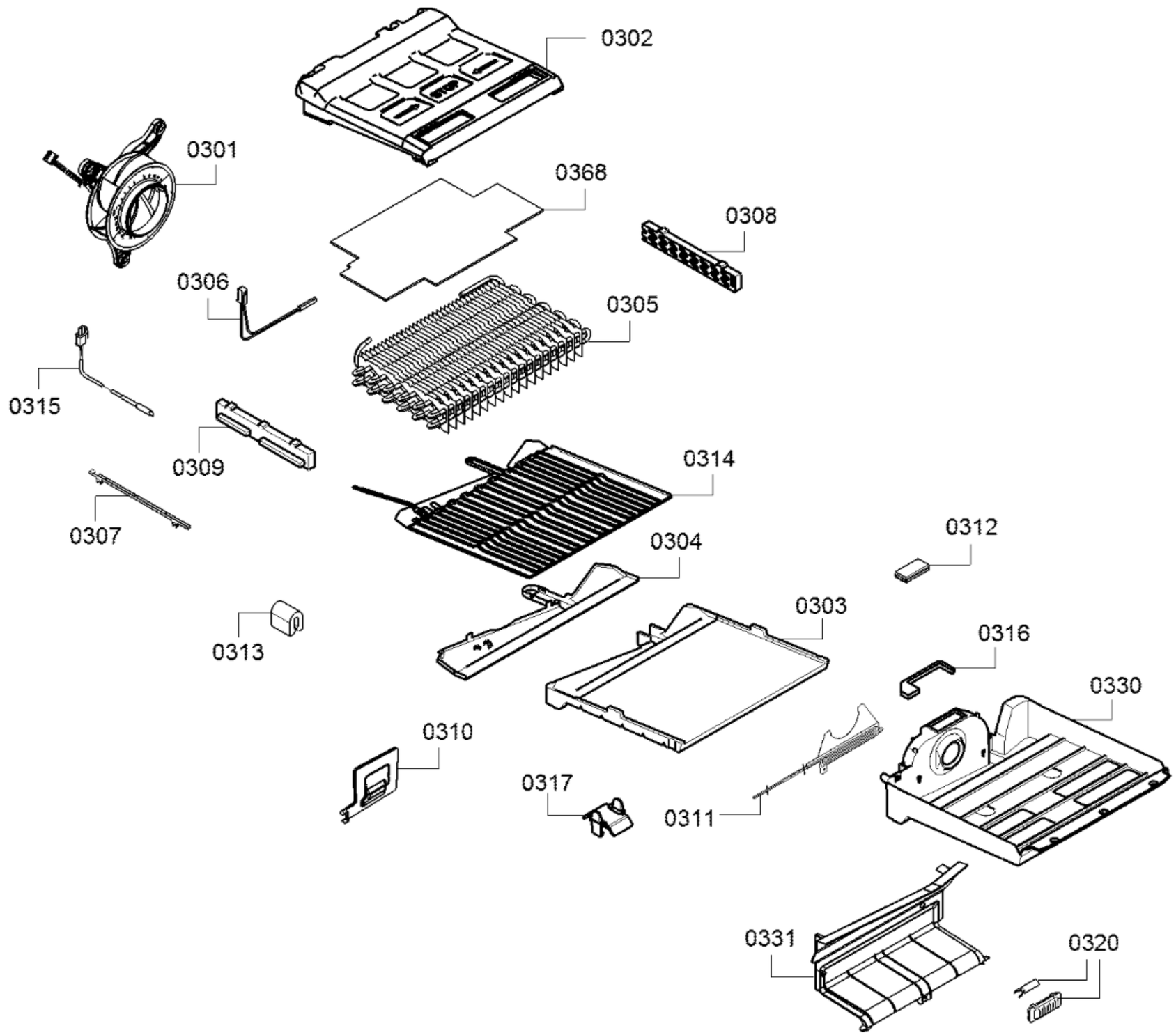

58300000189413 aet 000 d 3/4

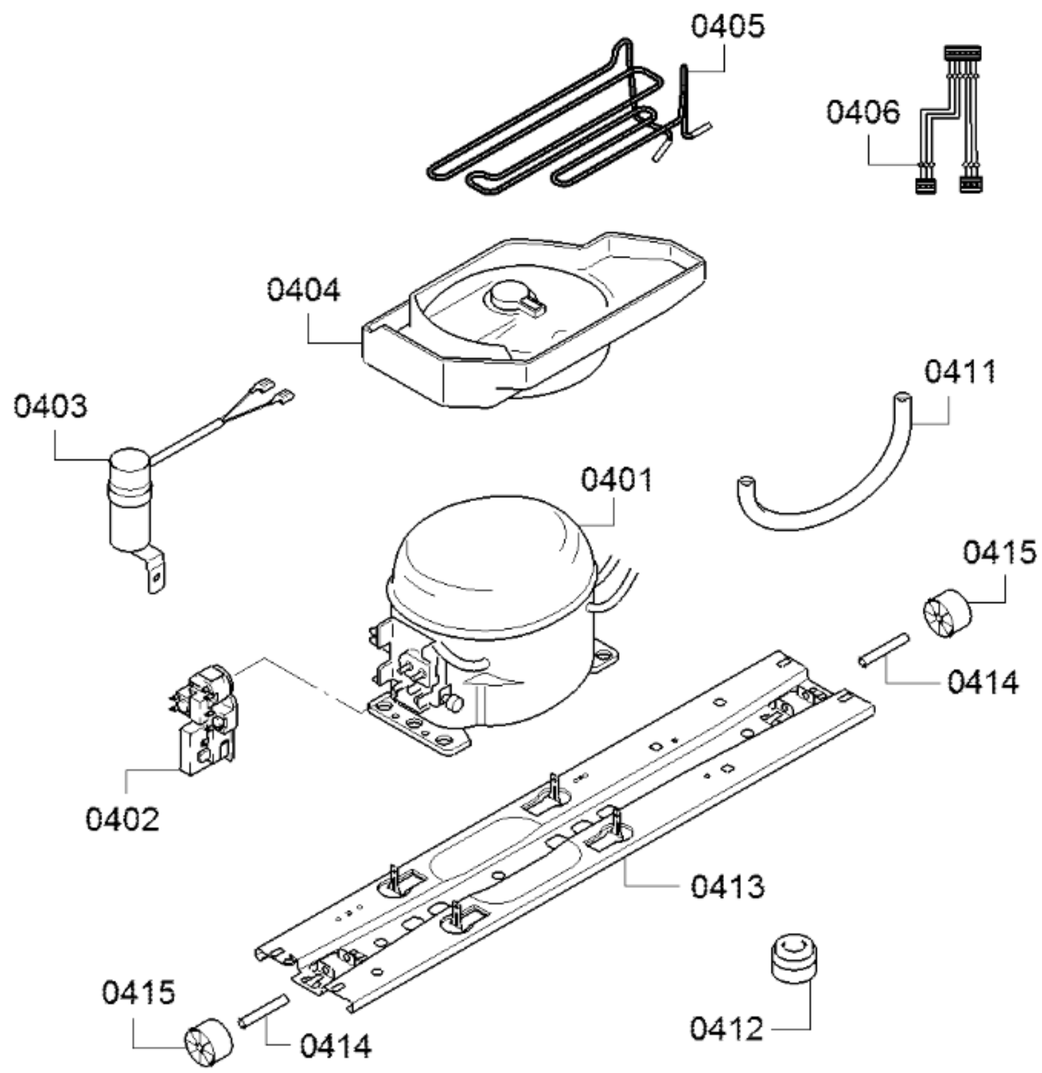

58300000189413 aet 000 d 4/4