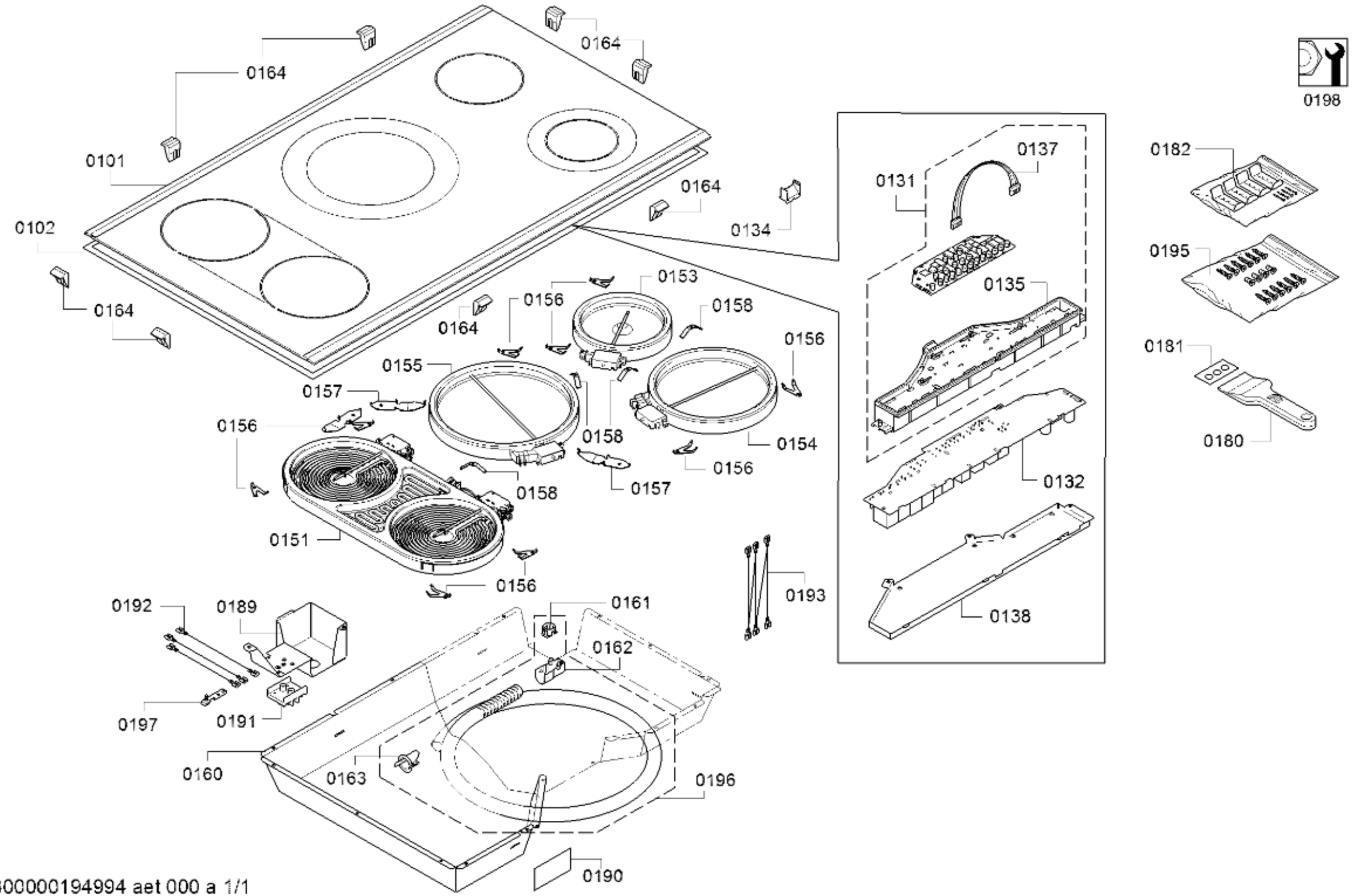

58300000194994 aet 000 a 1/1