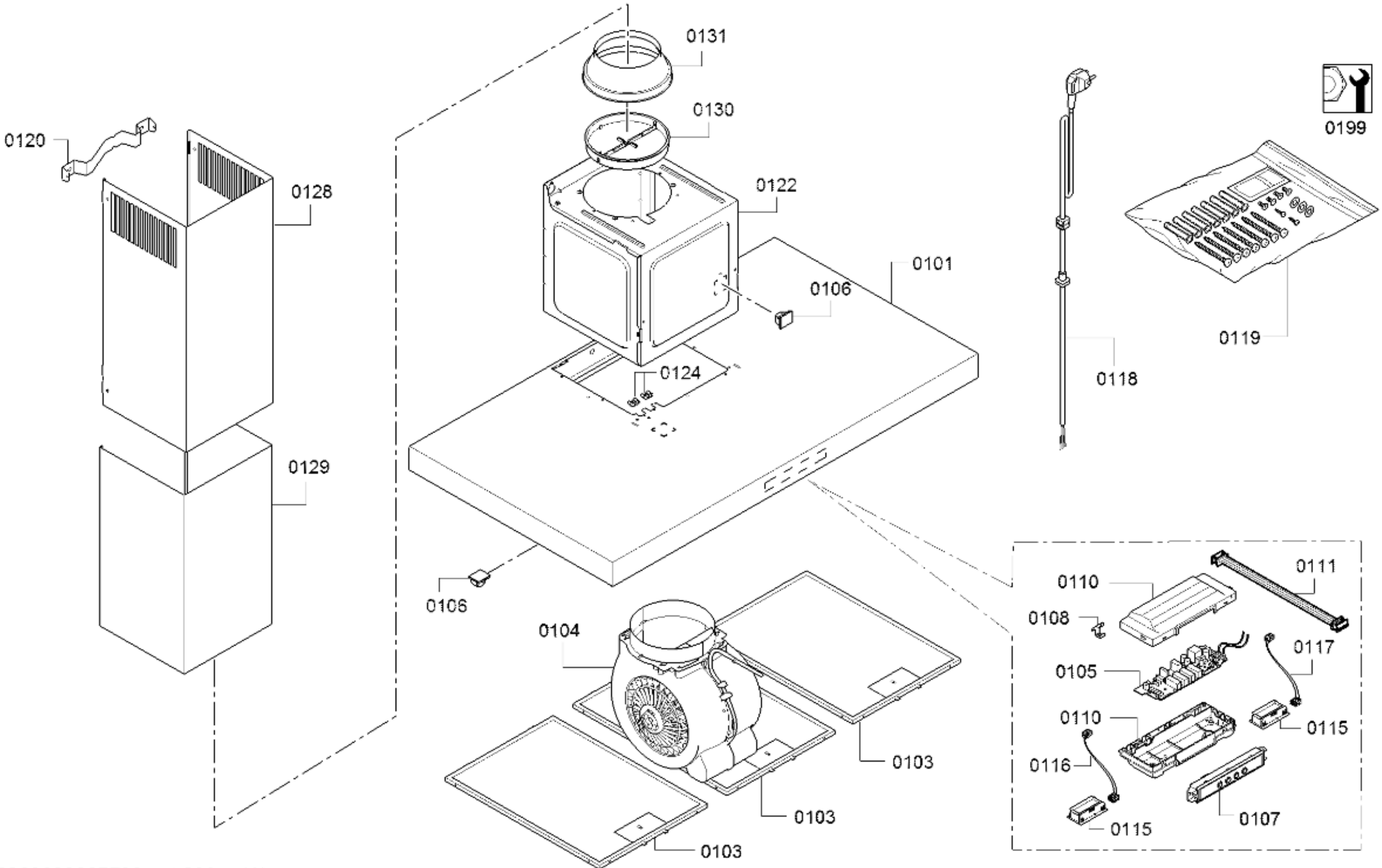

58300000205709 aet 000 a 1/1