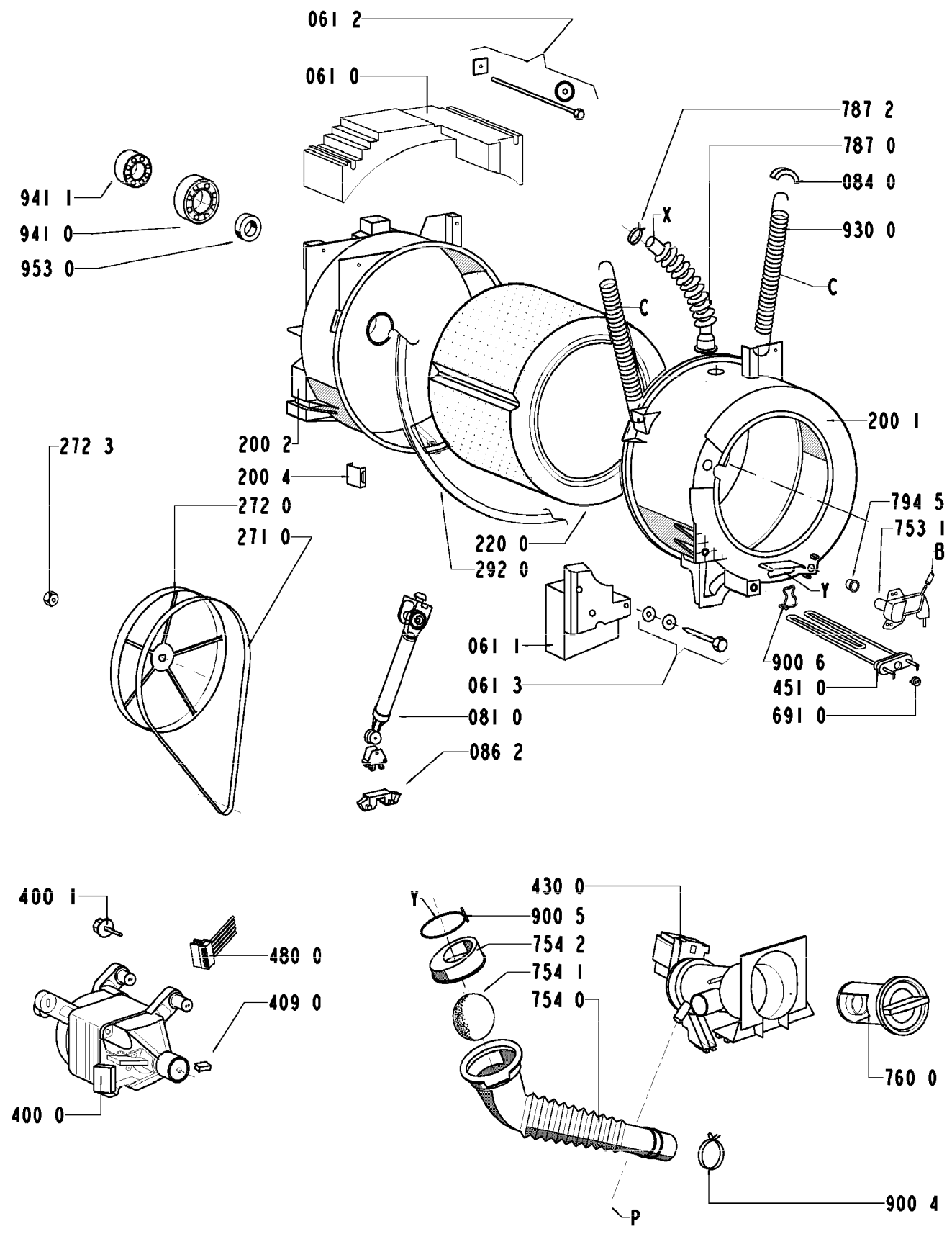

8580 033 22440