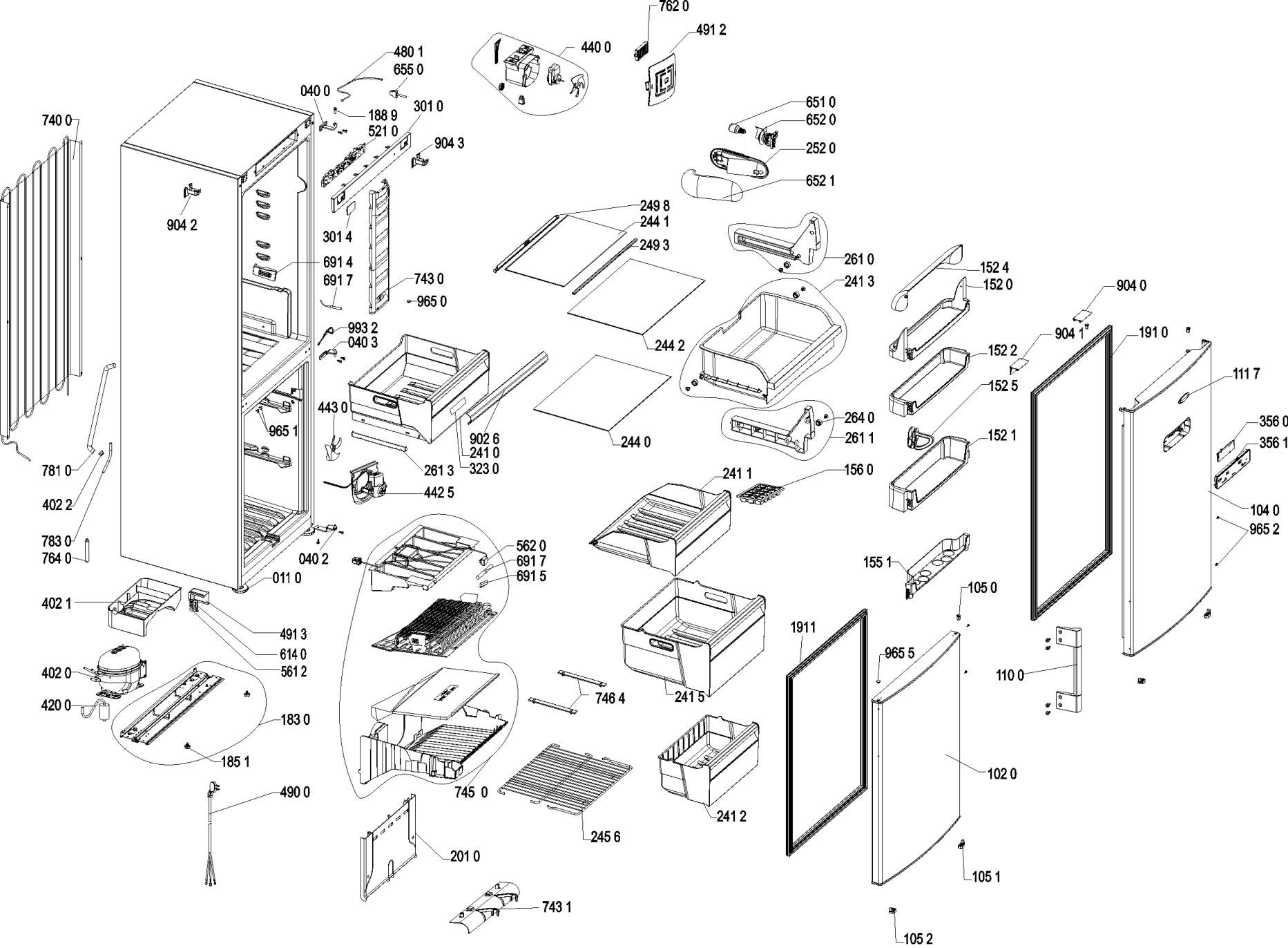

4000 106 12802