A

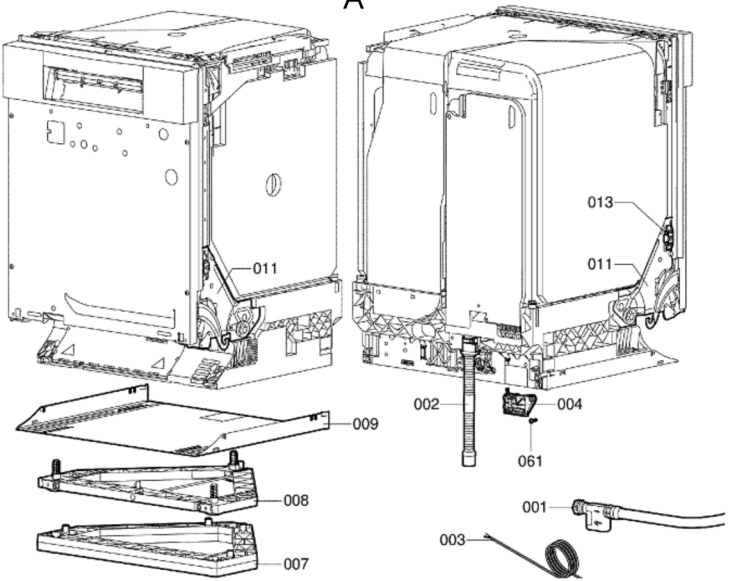

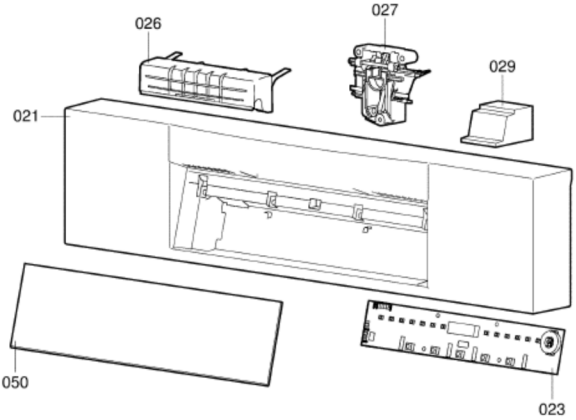

S41024471D0