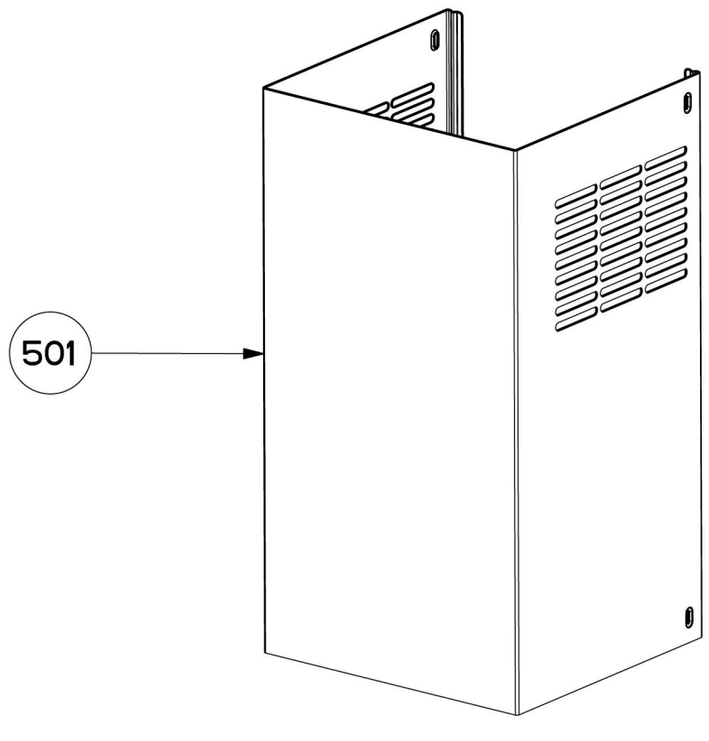
501

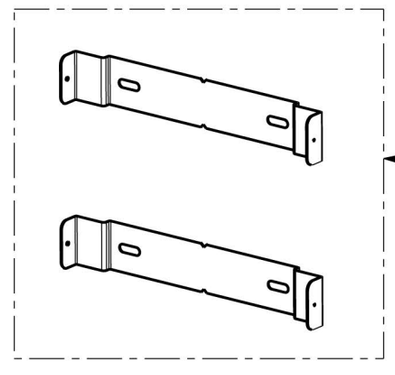
502

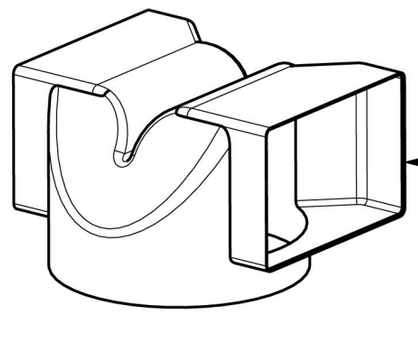
504

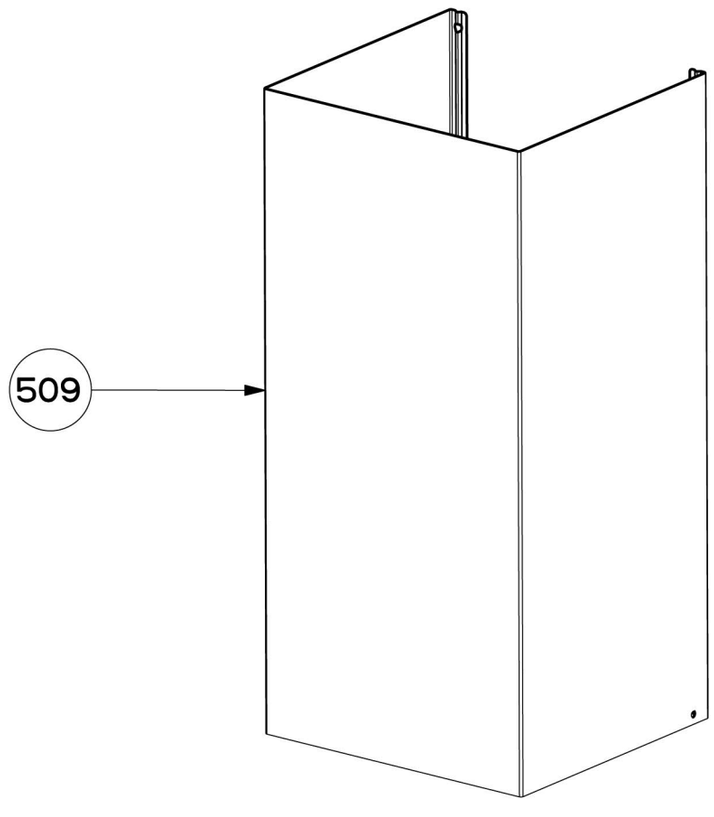
509

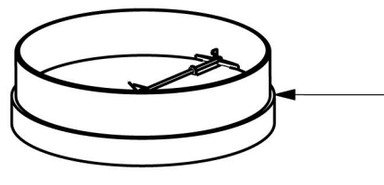
507

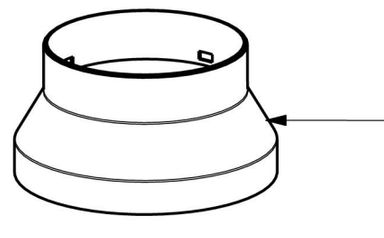
508

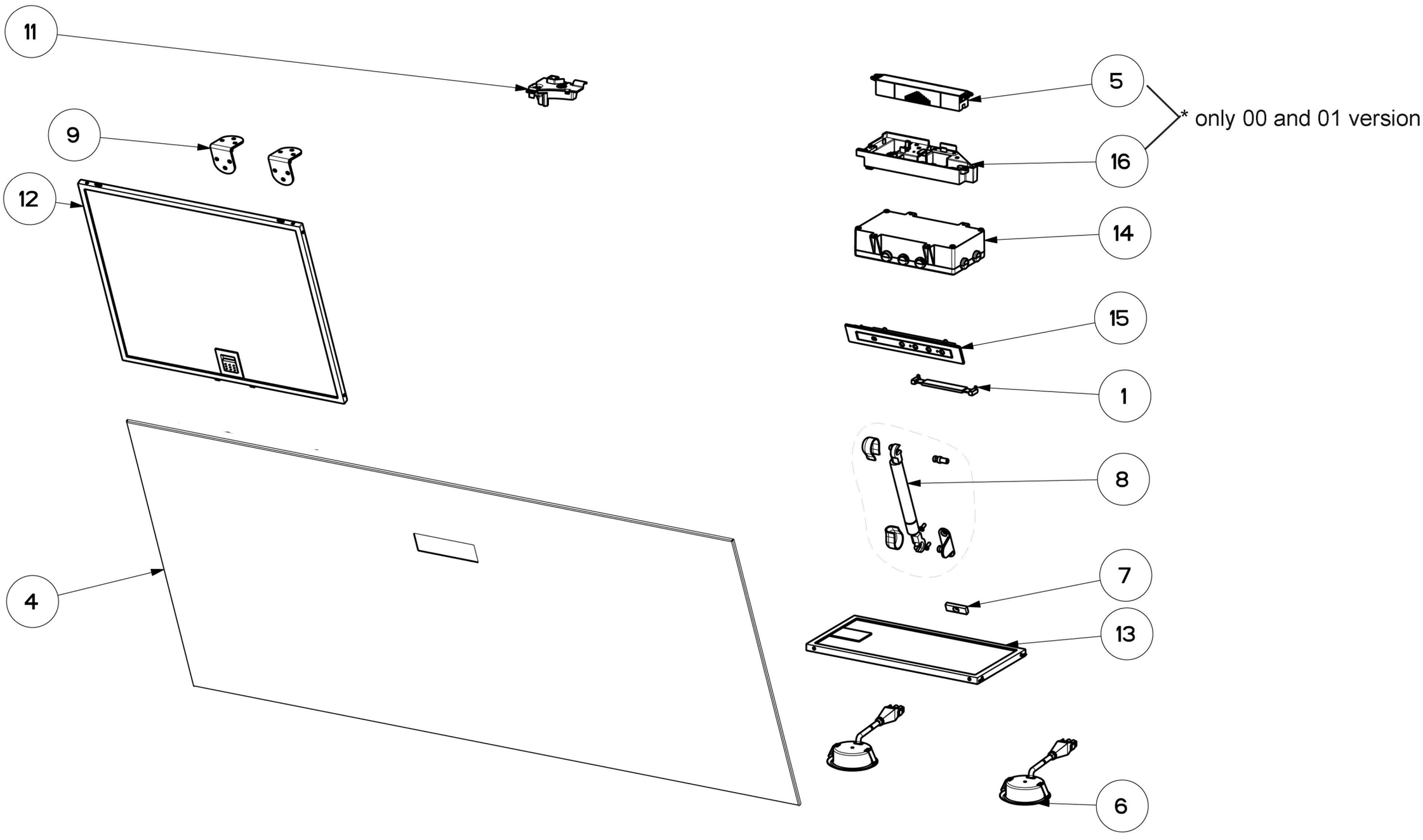
11
9
12
4
5
16
14
15
1
8
7
13
6
* only 00 and 01 version