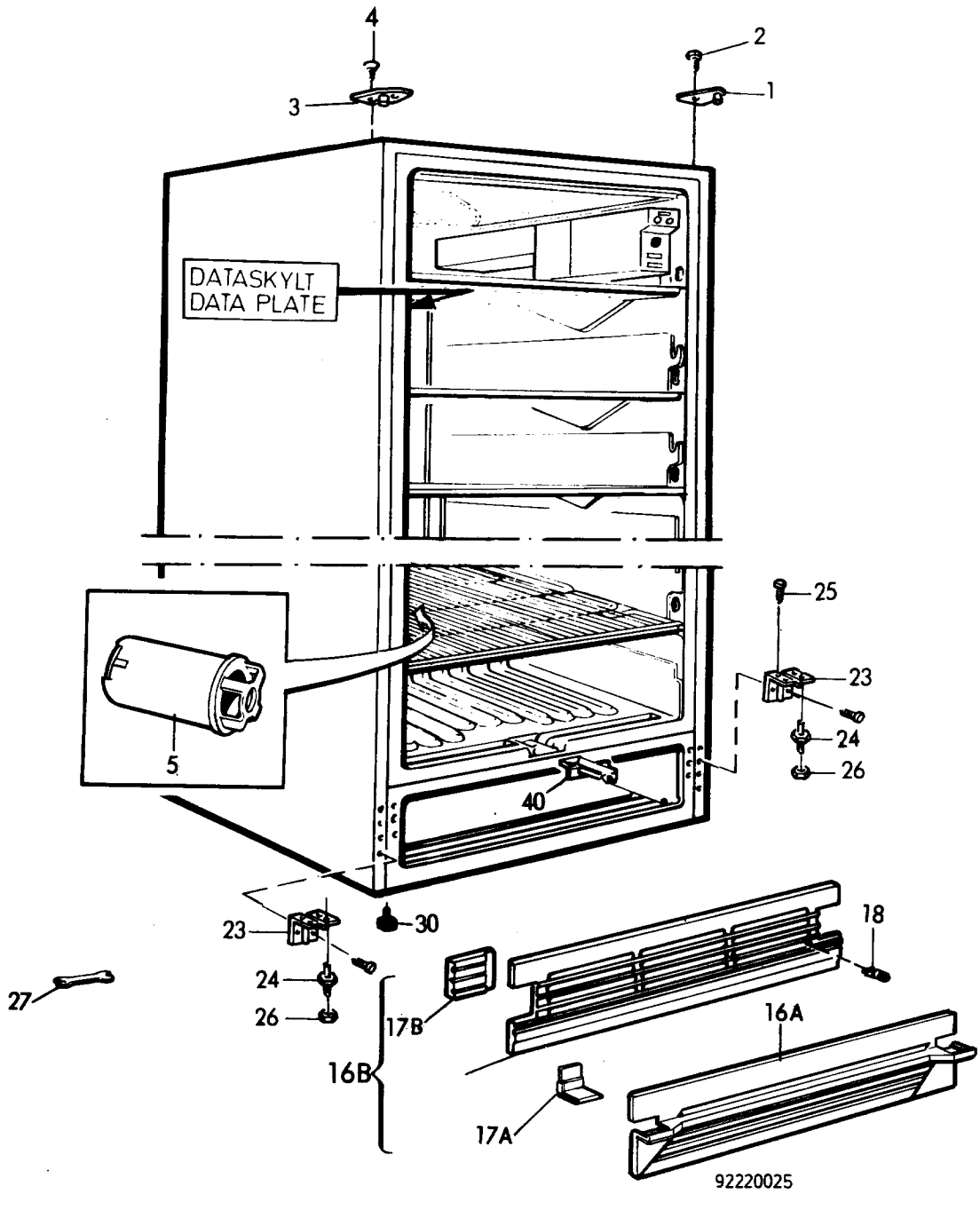
4
2
3
1
DATASKYLT
DATA PLATE
25
23
24
26
5
40
23
30
18
24
27
26
17B
16A
16B
17A
92220025